Chapter

8.3 Magnetic Tape

Robert H. Perry

8.3.1 Introduction

Magnetic tape includes a multiplicity of products used for magnetic recording, all consisting of a magnetizable medium on a flexible substrate. Because of the great variety of machine types and recording formats in use and being developed, magnetic tape is designed and produced with widely different magnetic media, widths, thicknesses, lengths, and other properties optimized for each application. Media are used in either strip form in reels, cartridges, cassettes, and cards or in discs of different diameters. Similar technologies are used to produce all these products.

8.3.2 Basic Construction

Magnetic tape consists of a magnetic film or coating supported by a flexible substrate, or base film, which in many applications is coated on the back with a nonmagnetic coating (Figure 8.3.1).

Backcoatings are used primarily in the most demanding tapes, such as professional and some consumer video, professional audio, instrumentation, and data products, where special winding and handling characteristics are required. This coating contains a conductive pigment, usually carbon black, which reduces buildup of static charge and therefore minimizes the accumulation of dirt and debris on the tape, factors which can cause *drop-outs*, or loss of signal with attendant loss of stored information. The backcoating also provides better frictional characteristics than raw base film does, and air is more easily eliminated from adjacent layers during winding. This reduces the tendency of the tape to cinch or form *pop strands,* and there is less likelihood of uneven stacking, edge damage, and creasing of the tape.

The *base film* is an integral and significant part of the whole tape system and is largely responsible for its mechanical strength and stability. Other factors such as stiffness and surface smoothness have a profound influence on tape performance in many applications, and base films having the proper characteristics for a given application must be carefully selected.

The principal substance used in the great preponderance of magnetic tapes is poly(ethylene-terephthalate), or simply *polyester,* abbreviated PET. PET has an excellent combination of properties including chemical stability and mechanical properties, such as tensile strength, elongation

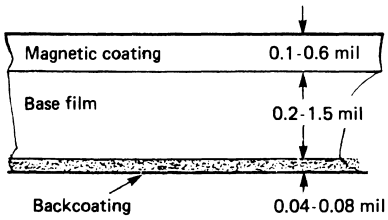

Figure 8.3.1 Magnetic-tape base-film and coating thickness.

Table 8.3.1 Physical Properties of Poly(ethyleneterephthalate) Base

Property	Balanced	Tensilized
Tensile strength, lb/in^2 N/m^2	25,000 172.38×10^6	40,000 275.8×10^6
Force to elongate 5%, lb/in^2 N/m^2	14,000 96.53×10^6	22,000 151.69×10^6
Elastic modulus, lb/in^2 N/m^2	550,000 3.79×10^9	1,100,000 7.58×10^9
Elongation,%	130	40
Thermal coefficient of linear expansion, per deg C	1.7×10^{-5}	1.7×10^{-5}
Shrinkage at 100°C, % (per 30 min interval)	0.4	2.5
Note: Measurements in machine direction		

and modulus, tear resistance, availability, and cost. Some typical properties are shown in Table 8.3.1.

Many different types and grades of PET are on the market for both magnetic tape-related and unrelated applications. In all cases, mechanical strength in the plastic film is achieved during its manufacture by a process of biaxial, and sometimes uniaxial, orientation of polymer chains in the hot film after extrusion of the melt. Biaxial orientation is achieved by stretching in both the machine and the transverse directions, and the resulting film has a balance of properties in the two directions. Balanced film is adequate for many magnetic tape applications, especially those employing gauge thicknesses greater than 0.5 mil (0.0127 mm). In thinner gauges greater resistance to stretching is needed, and PET is used that is *tensilized*, i.e., oriented by drawing additionally in the machine direction.

Base films for magnetic tape range in thickness from about 0.2 to 1.5 mils (3 mils for flexible disks). They are employed by tape manufacturers in widths ranging from 12 to 60 in (0.3 to 1.5 m) and in lengths up to 15,000 ft (4572 m). The base-film manufacturer must ensure that the base film has the right balance of surface smoothness for recording performance and roughness for runability in the coating and processing steps. Small-particle-size, inorganic additives are incorporated in the PET to provide slip properties in film that would be otherwise unmanageable. These surface asperities must be critically controlled, especially for short-wavelength recording applications, since the base-film surface-roughness profile can be carried—to a

degree—through the magnetic coating and reflected in the tape-surface roughness. An asperity of 10 μin, for example, in a typical 100-μin-wavelength video recording can result in a loss of signal of 5.5 dB due to head-to-tape separation, as seen from the Wallace formula

$$\text{spacing loss (dB)} = 54.6\, d/\lambda \tag{8.3.1}$$

where d = the head-tape spacing and λ = the wavelength.

8.3.2a Magnetic Coating

There are two common types of magnetic coatings used in magnetic tape. Most of them use magnetic particles bound in a matrix of organic, polymeric binder that is applied to the substrate from a dispersion in solvents. Other types are made by vapor deposition of thin films of metal alloys.

Most magnetic coatings contain a single layer, although some tapes are made with dual-layer magnetic coatings having different coercivities and are designed to have flat response over a range of frequencies. Magnetic-tape performance is a function of both the formulation of ingredients in the coating and the process by which the coating is applied and processed. The most important component in the formulation is the magnetic material itself.

Magnetic Materials

A wide variety of single-domain magnetic particles is used having different properties, depending on the electrical requirements of each tape application. Retentivities range from about 1000 to 3000 G, and coercivities range from about 300 to 1500 Oe. Size and shape are important because they relate to how well the particles pack in the coating; the signal-to-noise ratio achievable is proportional to the number of particles per unit volume in the coating. The length of the particles is about 8 to 40 μin (0.2 to 1.0 μm), and they are acicular with aspect ratios of 5/1 to 10/1. Acicularity makes the particles magnetically anisotropic, and thus it governs magnetic properties not inherent in the material. In general, magnetic pigments are loaded to as high a level as possible commensurate with retention of desirable physical properties and avoidance of shedding. The limiting factor is the amount of pigment the binder can retain without loss of cohesion and, hence, durability.

There are four basic types of magnetic particles used in tape:

- γ-ferric oxide
- Doped iron oxides
- Chromium dioxide
- Metallic particles, which usually consist of elemental iron, cobalt, and/or nickel

γ-ferric oxide has been by far the most widely used material (Hc 300 to 360 Oe) and is useful for many of the lower-energy applications in which the ultimate in recording density or short-wavelength recording capability is not required. The sequence of steps used in the commercial production of γ-ferric oxide is as follows:

- Precipitation of seeds of α-FeOOH (goethite) from solutions of scrap iron dissolved in sulfuric acid, or from copperas (ferrous sulfate obtained as a by-product from titanium dioxide manufacture)

- Growth of more goethite on the seeds
- Dehydration to α-Fe_20_3 (hematite)
- Reduction to Fe_30_4 (magnetite)
- Oxidation to γ-ferric oxide (maghemite)

An improved γ-ferric oxide is produced starting with ferrous chloride rather than ferrous sulfate and precipitating γ-FeOOH (lepidocrocite) rather than α-FeOOH in the initial step.

Cobalt doping of iron oxide affords particles with higher coercivities (500 to 1200 Oe). The older process involves precipitation of cobaltous salts with alkali in the presence of yellow iron oxide (α-FeOOH), dehydration, reduction to cobalt-doped magnetite, and oxidation to cobalt-doped magnetite containing varying amounts of FeO. The resulting particles have cobalt ions within the lattice of the oxide, and they exhibit a marked magnetocrystalline anisotropy. This gives rise both to a strong temperature dependence of the coercivity and to magnetostrictive effects, which can cause problems of greatly increased print-through, increased noise, and loss of output resulting from stress on the tape through head contact. Improved stability can be achieved by using other additives, such as zinc, manganese, or nickel, with cobalt.

Epitaxial cobalt-doped particles can be used that largely overcome these problems because cobalt ion adsorption is limited to the surface of the oxide. Epitaxial particles have superseded lattice-doped particles in most applications.

Chromium dioxide provides a range of coercivities similar to that of cobalt-doped iron oxide (450 to 650 Oe) and possesses a slightly higher saturation magnetization, that is, 80 to 85 emu/g compared with 70 to 75 emu/g for γ-ferric oxide. It has uniformly good shape and high acicularity and lacks voids and dendrites, factors that account for the excellent rheological properties of coating mixes made with it. Its low Curie temperature (128°C) has been exploited in thermal contact duplication, a process which was largely developed in the late 1960s but because of problems in obtaining high-quality duplicates was not generally commercialized.

A disadvantage of chromium dioxide is its abrasiveness, which can cause excessive head wear. Also, it is chemically less stable than iron oxide, and under conditions of high temperature and humidity it can degrade to nonmagnetic chromium compounds, resulting in loss of output of the tape. Chromium dioxide and cobalt-doped iron oxide yield tapes having 5 to 7 dB higher S/N ratio than those made from γ-ferric oxide.

The presence of metallic particles results in tapes that have a 10 to 12-dB higher S/N ratio than those made from γ-ferric oxides because of their much higher saturation magnetization (150 to 200 emu/g), retentivity (2000 to 3000 G), coercivity (1000 to 1500 Oe), and smaller particle size, These factors, together with a square shape of the hysteresis loop, permit recording at shorter wavelengths with less self-erasure. Thus, recordings can be made at slower speeds without sacrifice in dynamic range, and higher bit-packing densities can be achieved.

Metallic particles are made by several different kinds of processes, the more important commercial ones being reduction of iron oxide with hydrogen, and chemical reduction of aqueous ferrous salt solutions with borohydrides. Metallic particles are more difficult to disperse than iron oxides because of their smaller size and higher remanence, and they are highly reactive. Processes such as partial oxidation of the surface or treatment with chromium compounds are used in their preparation to stabilize them for handling during tape manufacture. The corresponding tapes are more stable, but their susceptibility to corrosion at an elevated temperature and humidity is a disadvantage.

Table 8.3.2 Physical Properties of a Poly(esterurethane)

Parameter	Value
Tensile strength, lb/in^2 N/m^2	8000 55.16×10^6
Stress at 100% elongation, lb/in^2 N/m^2	300 2.07×10^6
Ultimate elongation,%	450
Glass transition temperature, deg C	12
Hardness, shore A	76
Density, g/cm^3	1.17
Viscosity at 15% solids/tetrahydrofuron, cP	800
Pa· s	0.8

Magnetic-tape manufacturers have also developed products consisting of thin films (100 to 150 nm) of metal alloys deposited on the substrate under vacuum or by sputtering. The retentivity of these tapes (1.2×10^4 G) is almost an order of magnitude higher than that of γ-ferric oxides, with a corresponding increase in recording density.

8.3.2b Binders

Binders must be capable of holding the magnetic pigment together in a flexible film that adheres to the base film with a high degree of toughness and chemical stability, and with thermoplastic properties enabling the pigmented film to be compacted to give smooth surfaces. It should also be soluble in suitable solvents. These requirements are not met by many substances available today for producing magnetic tapes.

Polyurethanes, either used as such or prepared in situ, represent the most important class of polymers for this purpose because of their affinity for pigments, their toughness and abrasion resistance, and their availability in soluble forms. Of the two types in use, poly(esterurethanes) are preferred over poly(etherurethanes) because of their superior mechanical properties in tape. Some physical properties of a typical poly(esterurethane) are shown in Table 8.3.2.

Other polymers can be used alone or in combination with one or two other polymers to obtain the desired properties. Although a great many types are claimed in the patent literature, the other most important polymers include poly(vinyl chloride-co-vinyl acetate/vinyl alcohol), poly(vinylidene dichioride-co-acrylonitrile), polyesters, cellulose nitrate, and phenoxy resin.

Most magnetic-tape coatings are cross-linked with *isocyanates* to provide durability. Isocyanate-curing chemistry is rather complex and difficult to control, and for this reason the industry explored curing with electron-beam radiation. A whole new field of binders was developed for this purpose that polymerize rapidly to high polymers in a controllable fashion.

Dispersants are surface-active agents that aid in the separation of magnetic particles, a process necessary for achieving the desired electrical performance of the tape. They facilitate separation of charges on the particles and stabilize particle separation. Common dispersants are

lecithin, organic esters of phosphric acid, quaternary ammonium compounds, fatty acids, and sulfosuccinates.

Conductive materials are often added to tape formulations to reduce electrostatic charge buildup on tape as it is run on machines. Conductive carbon blacks are commonly used to reduce the resistivity of tape by about four to six orders of magnitude.

Lubricants are necessary to prevent *stiction* of the tape as it comes in contact with the record or playback head. A great many different materials are effective as lubricants, including:

- Silicones; fatty acids, esters, and amides
- Hydrocarbon oils
- Triglycerides
- Perfluoroalkyl polyethers
- Related materials, often from natural products

Lubricants can be either incorporated in the tape coating formulation or added topically at the end of the tape process.

8.3.2c Miscellaneous Additives

Small amounts of other materials are included in many tape products to achieve special properties. For example, fine-particle alumina, chromia, or silica is often added to prevent debris obtained during use of the tape from accumulating on the heads and clogging them. This is not normally a requirement in tapes containing chromium dioxide as a magnetic pigment. Other additives include fungicides, which are used in certain limited applications.

Solvent choice is determined by chemical inertness, binder solubility and mix rheology, evaporation rate, availability, toxicity, ease of recovery, and cost. The most commonly used solvents for magnetic tape processes are tetrahydrofuran, methyl ethyl ketone, cyclohexanone, methyl isobutyl ketone, and toluene. Many common types of coating defects can be avoided by the combinations of solvents to provide differential evaporation rates from the coating during the drying process. Finished tape normally has very low levels of residual solvent.

8.3.3 Manufacturing Process

The following sequence of steps is employed in manufacturing magnetic tape:

- Mix preparation
- Dispersion, or milling
- Coating
- Drying
- Surface finishing
- Slitting
- Rewind and/or assembly

- Testing
- Packaging

8.3.3a Dispersion

The magnetic particles must be deagglomerated without reducing the size of individual particles. This step is accomplished by agitating the combined ingredients as a wet mix in one of several types of mills, such as pebble, steel ball, sand, or Sweco, which produce high shear between agglomerates. Milling efficiency in a given system is controlled by mix solids content, viscosity, mix-to-media ratio, and temperature. The end point is reached when visual examination of a drawdown sample under magnification shows the absence of agglomerates or that it meets a predetermined standard of dispersion quality. Another method is to mill until a maximum in the derivative of the *B-H* loop is attained.

8.3.3b Coating

The coater is perhaps the most critical processing step in the entire operation. There are tradeoffs between advantages and disadvantages among the different types of coating methods used, principal among which are *reverse roll* (Figure 8.3.2*b*) and *gravure* (Figure 8.3.2*c*). *Reverse roll* is the most widely used, general-purpose method. *Gravure* is especially suited for very thin coatings (0.2 mil or less). *Knife coating* (Figure 8.3.2*a*), one of the oldest methods, is disappearing with the advent of thin coatings on thin films and high-speed, precision coatings. *Extrusion* and *curtain* coating are increasingly important because they afford high-quality coatings at high speeds. Coaters vary in width from 12 to 60 in as do the base films, and operate at speeds of approximately 250 to 1000 ft/min.

Metal Evaporation Process

The process of depositing a metal layer onto a flexible substrate through evaporation of a metal in a vacuum is referred to as *metal evaporation* (ME) coating [1]. This technique was developed to increase packing density.

One means of increasing the volumetric packing density of magnetic tape is to make the magnetic layer thinner while preserving or increasing its magnetic capabilities. A means of achieving these seemingly contradictory objectives is to deposit a continuous pure metal film onto the base film, instead of using the typical dispersed particulate coating. The most direct way to maximize the magnetic volume of the recording layer is to remove all non-magnetic components (oxygen) of the particle itself and by removing the binding and resin matrix from the formulation. A nearly ideal magnetic recording medium is achievable through physical deposition of magnetic material on the base film through metal evaporation.

As pressure is decreased (vacuum increased) liquids evaporate more rapidly and at a lower temperature. A vacuum chamber used for metal evaporation onto a base film consists of the following components (shown in diagram form in Figure 8.3.3):

- Transport system for unwinding and rewinding the base film
- A high temperature crucible to hold molten metal after it has been heated, either by resistance or with an electron beam gun

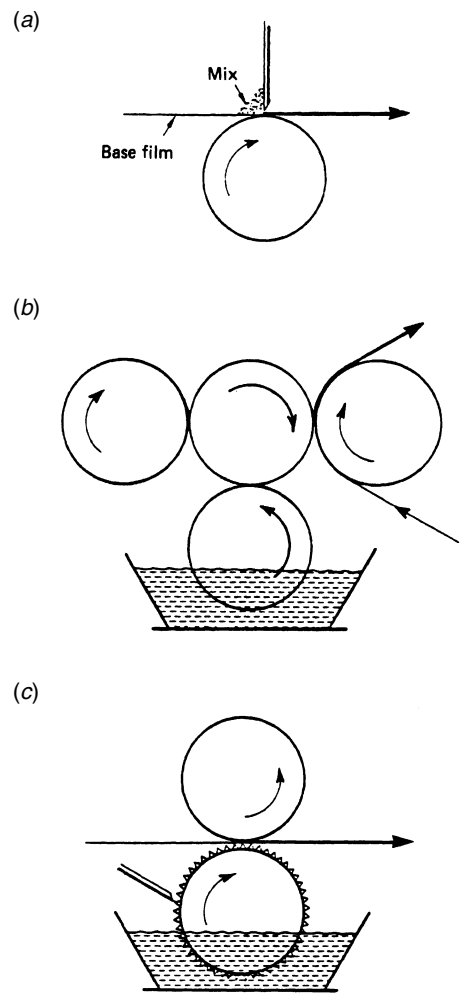

Figure 8.3.2 Tape manufacturing process: (*a*) knife coating, (*b*) reverse-roll coating, (*c*) gravure coating.

- An internally chilled cooling drum around which the base film is wrapped to remove heat from the condensing metal
- A vacuum pump to quickly remove the air and water vapor from the vacuum chamber

The magnetic coating thickness of a metal evaporated tape is typically 4 μin. This is more than 20 times thinner than the metal particle layer of D-2 tape. Most of the thickness of the tape, therefore, is basically that of the base film being used. The advanced magnetic properties of metal evaporated tape have allowed equipment manufacturers to significantly increase packing densities for recorders of all types.

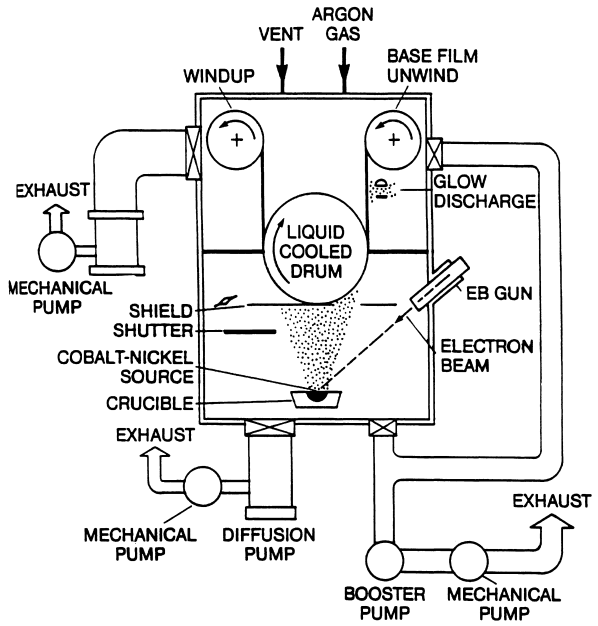

Figure 8.3.3 The metal evaporation process. (*After* [1]. *Courtesy of Quantegy.*)

Slot Die Coating

As shown in Figure 8.3.4, slot die coating utilizes a coating head that has a slot cut into it [1]. The geometry of this slot and its position relative to the base film determines the parameters of the coating surface. Slot die coating is typically used for the thinnest and most critical of coatings. The slot die head usually has one slot but is capable of two or three slots, which results in multiple and different layers being applied to the base film. These can be applied wet on wet, or wet on dry.

8.3.3c Orientation

Maximum S/N performance is obtained when the magnetic particles are aligned, before drying, to the maximum extent possible in the direction of the intended recording. Accordingly, immediately after the wet-coating mix is applied, the web is passed through the field of an orienting magnet having a field strength (500 to 2000 G) optimized for the particular magnetic particle being used. Most tapes are longitudinally oriented, although some are oriented transversely to some degree. The coater itself exerts shearing forces on the mix and thus often imparts some longitudinal orientation in the particles even in this stage.

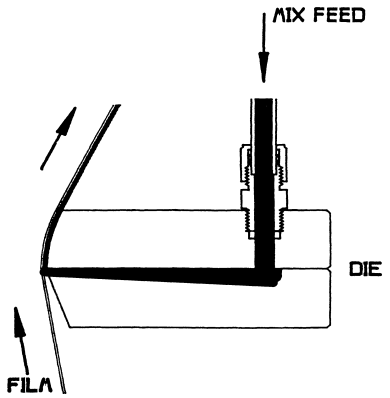

Figure 8.3.4 Simplified slot die coating process. (*After* [1]. *Courtesy of Quantegy.*)

8.3.3d Drying

The web is next passed through an oven containing circulating forced hot air. Many oven designs use air bearings at web-turnaround points to avoid rubbing between plastic and metal surfaces, and to minimize the formation of abrasion products, which can cause drop-outs. After the coating is dried, the magnetic particles are no longer free to move. During the eventual recording process, only magnetization vectors, or aligned spins of electrons within the molecular species of the particle domains, rotate.

8.3.3e Surface Finishing

Surface finishing is generally required to produce an extremely smooth surface to maximize head-to-tape contact, an absolute necessity for short-wavelength recording. This is accomplished by calendering the tape, or passing the web one or more times through a *nip,* or line of contact, between a highly polished metal roll and a plastic or cellulosic compliant roll. This compaction process also reduces voids in the coating and increases the magnetic pigment volume concentration, and in turn the retentivity of the tape.

8.3.3f Slitting

The web is slit into strands of the desired width, from 150 mils to 3 in (3.8 mm to 7.6 cm). Tolerances in width variation are about ± 1.0 mil to less than ±0.4 mil, depending on the application. Edge weave, or width waviness (*country laning*) over extended length, should not vary more than about 1 to 2 mils in 1-in video tapes and 0.4 mil in video cassette tape. Tape must be free from jagged edges and debris. Additional tape cleaning processes are sometimes used to ensure that loosely held dropout contributors are effectively removed.

8.3.3g Testing

Professional magnetic tape manufacturers test every component of tape in every step in the process, from individual raw materials through packaging. The most exacting specifications are set

forth and followed. Electrical tests, including those for dropouts, are especially stringent, and in professional audio, instrumentation, video, and computer tapes, each reel of tape is tested, in some cases end to end, before shipment. In addition, warehouse audits are performed to ensure maintenance of quality.

8.3.3h Assembly and Packaging

Tape is assembled in various formats but mainly in reels, pancakes, cassettes, and cartridges of different sizes. The same standards of precision, cleanliness, and quality exist in these areas as in tape making per se, and final assemblies of tape components and packages are all performed in ultra-clean-room environments.

8.3.4 References

1. Grega, Joe: "Magnetic and Optical Recording Media," in *NAB Engineering Handbook*, 9th ed., Jerry C. Whitaker (ed.), National Association of Broadcasters, Washington, D.C., pp. 893–906, 1999.

8.3.5 Bibliography

Bate, G.: "Recent Developments in Magnetic Recording Materials," *J. Appl. Phvs*. pg. 2447, 1981.

Hawthorne, J. M., and C. J. Hefielinger: "Polyester Films," in *Encyclopedia of Polymer Science and Technology*, N. M. Bikales (ed.), vol. 11, Wiley, New York, N.Y., pg. 42, 1969.

Jorgensen, F.: *The Complete Handbook* of *Magnetic Recording,* Tab Books, Blue Ridge Summit, Pa., 1980.

Kalil, F. (ed): *Magnetic Tape Recording for the Eighties,* NASA References Publication 1975, April 1982.

Lueck, L. B. (ed): *Symposium Proceedings Textbook,* Symposium on Magnetic Media Manufacturing Methods, Honolulu, May 25–27, 1983.

Nylen, P., and E. Sunderland: *Modern Surface Coatings,* Interscience Publishers Division, Wiley, London, 1965.

Perry, R. H., and A. A. Nishimura: "Magnetic Tape," in *Encyclopedia of Chemical Technology*, 3d ed., Kirk Othmer (ed.), vol. 14, Wiley, New York, N.Y., pp. 732–753, 1981.

Tochihara, S.: "Magnetic Coatings and Their Applications in Japan," *Prog. Organic Coatings*, vol. 10, pp. 195–204, 1982.